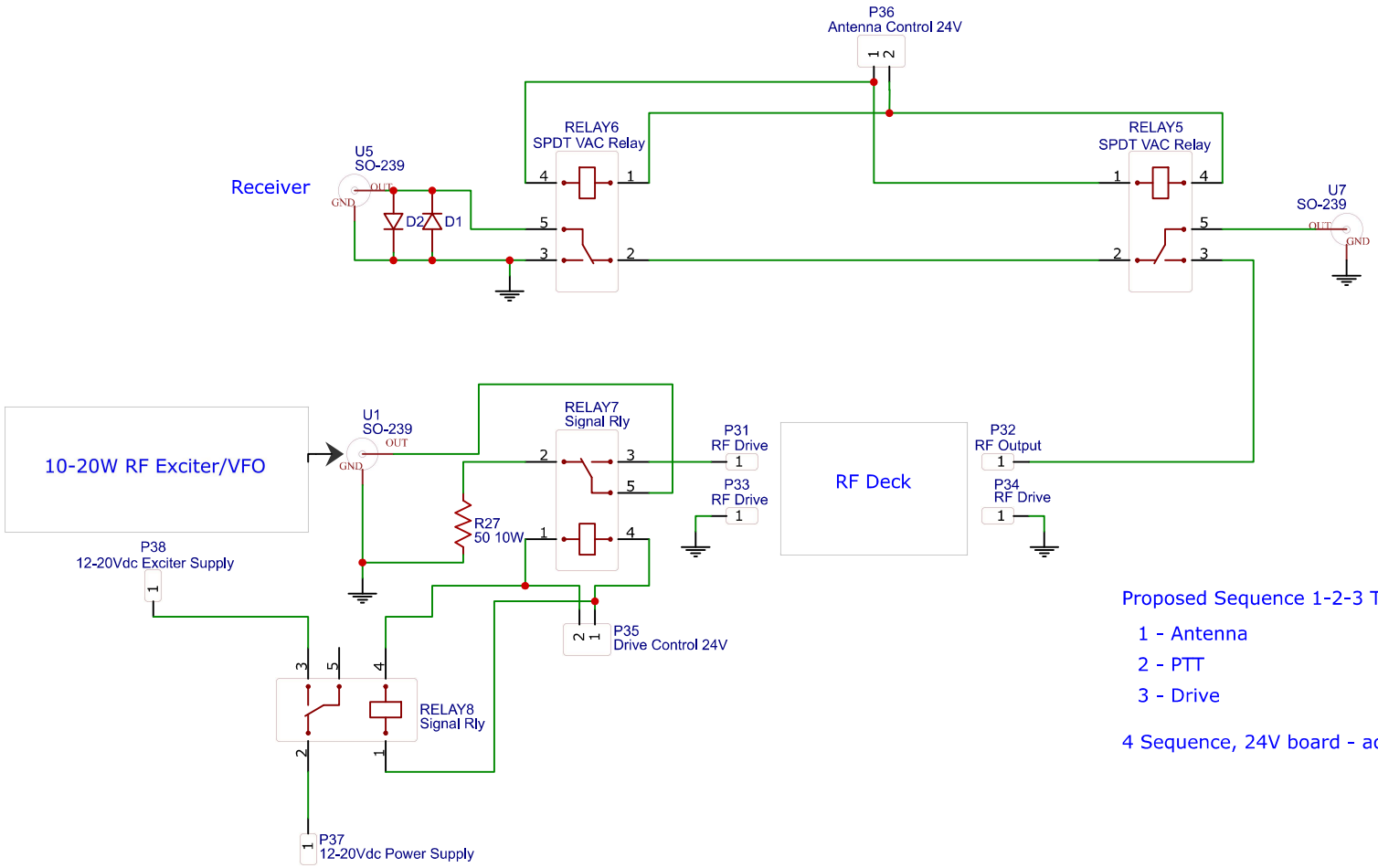

Proposed Sequence 1-2-3 TX, 3-2-1 RX

1 - Antenna

2 - PTT

3 - Drive

4 Sequence, 24V board - add HV??

Drive Control also needs to mute the VFO

TITLE: Antenna Switching		REV: 1.0
EasyEDA	Company: W9JSW	Sheet: 1/1
	Date: 2019-01-26 Drawn By: jswillms	

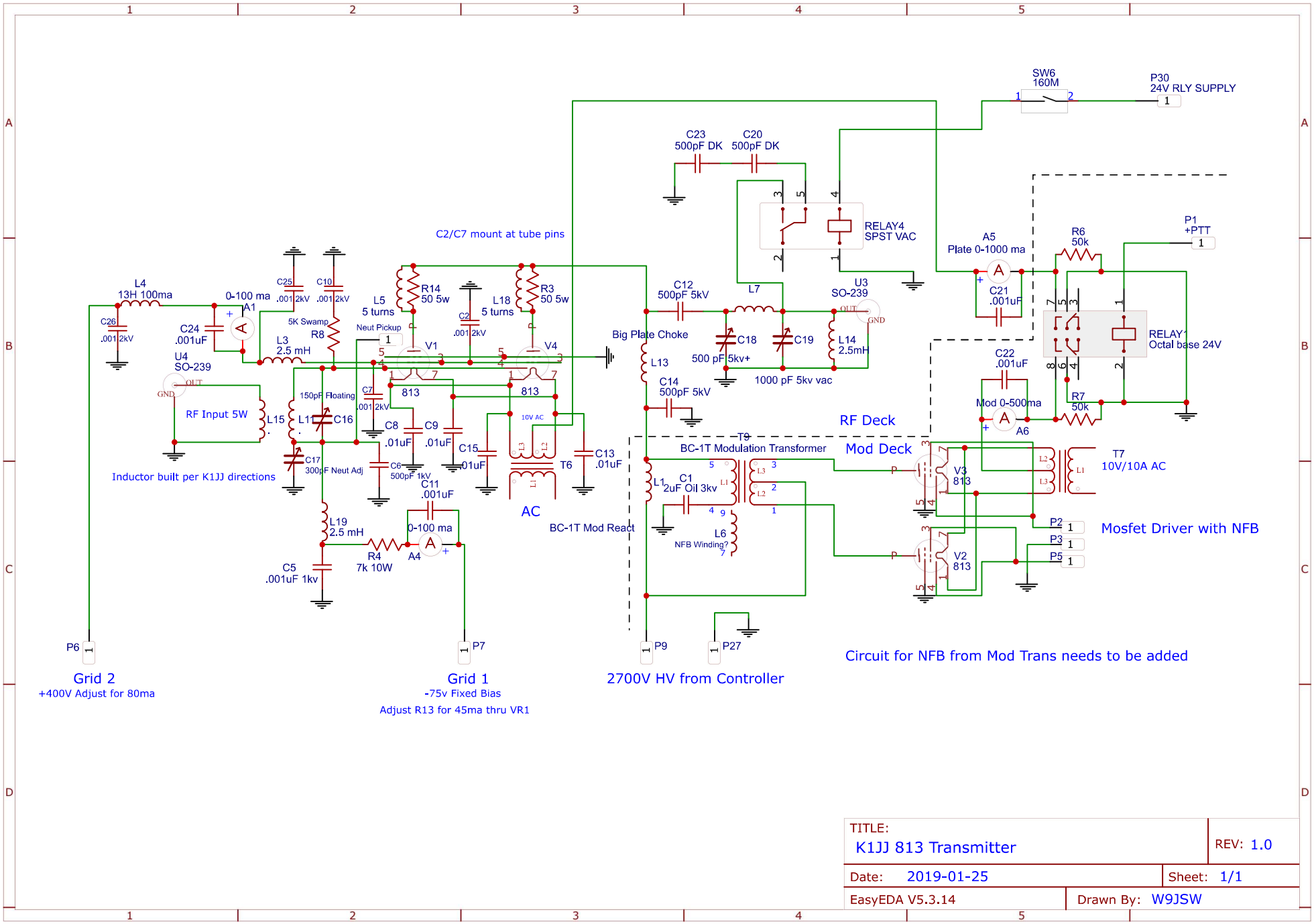

TITLE: K1JJ 813 Transmitter	REV: 1.0
Date: 2019-01-25	Sheet: 1/1
EasyEDA V5.3.14	Drawn By: W9JSW

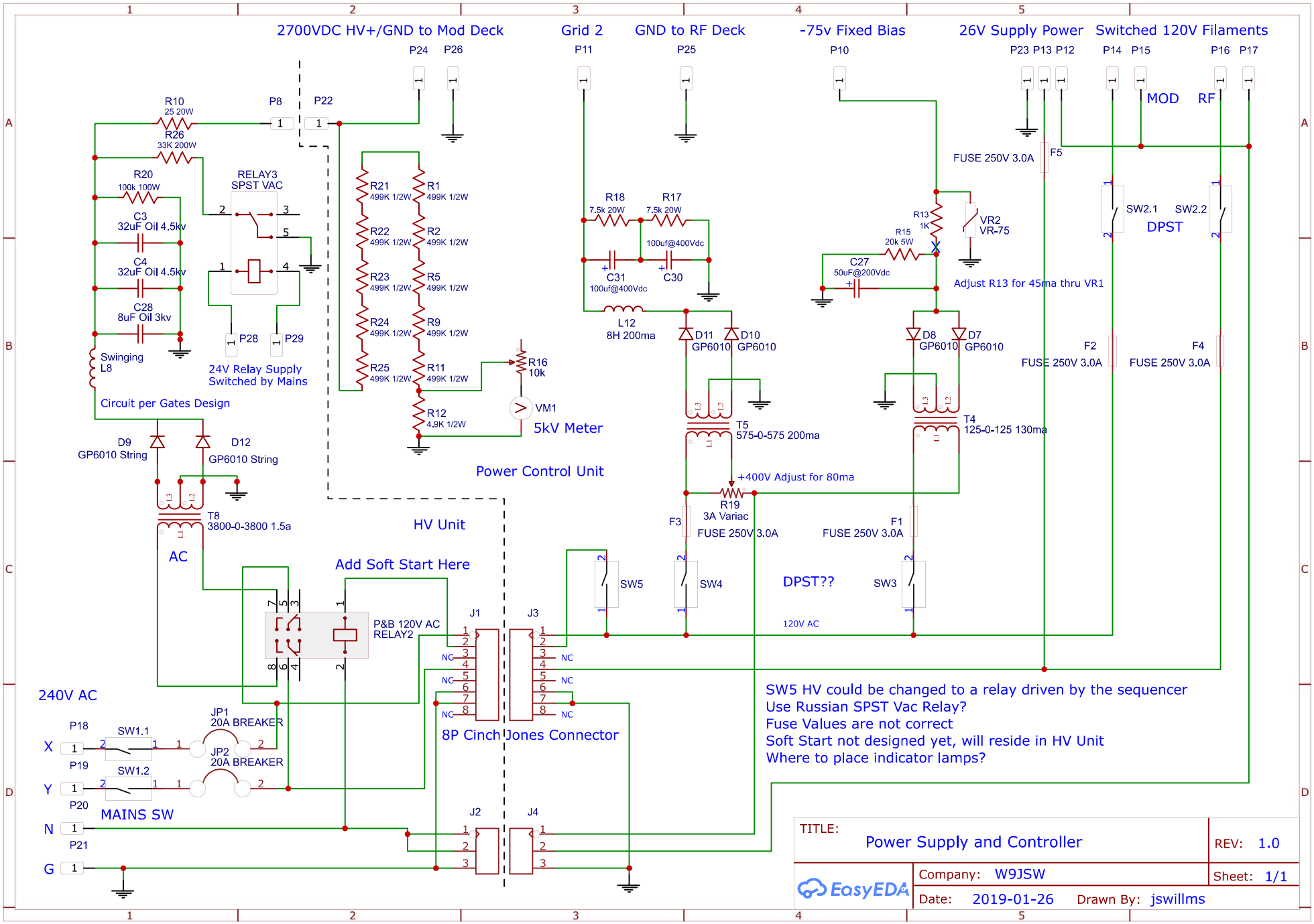
2700VDC HV+/GND to Mod Deck
Grid 2
GND to RF Deck
-75v Fixed Bias
26V Supply Power
Switched 120V Filaments
P24 P26
P11
P25
P10
P23 P13 P12
P14 P15
P16 P17
MOD
RF
R10
25 20W
R26
33K 200W
P8
P22
R20
100k 100W
C3
32uF Oil 4.5kv
C4
32uF Oil 4.5kv
C28
8uF Oil 3kv
Swinging
L8
RELAY3
SPST VAC
P28
P29
24V Relay Supply
Switched by Mains
Circuit per Gates Design
R21
499K 1/2W
R22
499K 1/2W
R23
499K 1/2W
R24
499K 1/2W
R25
499K 1/2W
R1
499K 1/2W
R2
499K 1/2W
R5
499K 1/2W
R9
499K 1/2W
R11
499K 1/2W
R12
4.9K 1/2W
R16
10k
VM1
5kV Meter
R18
7.5k 20W
R17
7.5k 20W
100uf@400Vdc
C31
100uf@400Vdc
C30
L12
8H 200ma
D11
GP6010
D10
GP6010
T5
575-0-575 200ma
+400V Adjust for 80ma
R19
3A Variac
F3
FUSE 250V 3.0A
FUSE 250V 3.0A
F5
R13
1K
R15
20k 5W
VR2
VR-75
C27
50uF@200Vdc
Adjust R13 for 45ma thru VR1
D8
GP6010
D7
GP6010
T4
125-0-125 130ma
F1
FUSE 250V 3.0A
SW2.1
SW2.2
DPST
F2
FUSE 250V 3.0A
F4
FUSE 250V 3.0A
Power Control Unit
D9
GP6010 String
D12
GP6010 String
T8
3800-0-3800 1.5a
AC
HV Unit
Add Soft Start Here
P&B 120V AC
RELAY2
J1
J3
NC
SW5
SW4
DPST??
SW3
120V AC
240V AC
P18
SW1.1
JP1
20A BREAKER
X
P19
SW1.2
JP2
20A BREAKER
Y
P20
MAINS SW
N
P21
G
8P Cinch Jones Connector
J2
J4
SW5 HV could be changed to a relay driven by the sequencer
Use Russian SPST Vac Relay?
Fuse Values are not correct
Soft Start not designed yet, will reside in HV Unit
Where to place indicator lamps?
TITLE:
Power Supply and Controller
REV: 1.0
Company: W9JSW
Sheet: 1/1
Date: 2019-01-26
Drawn By: jswillms
EasyEDA