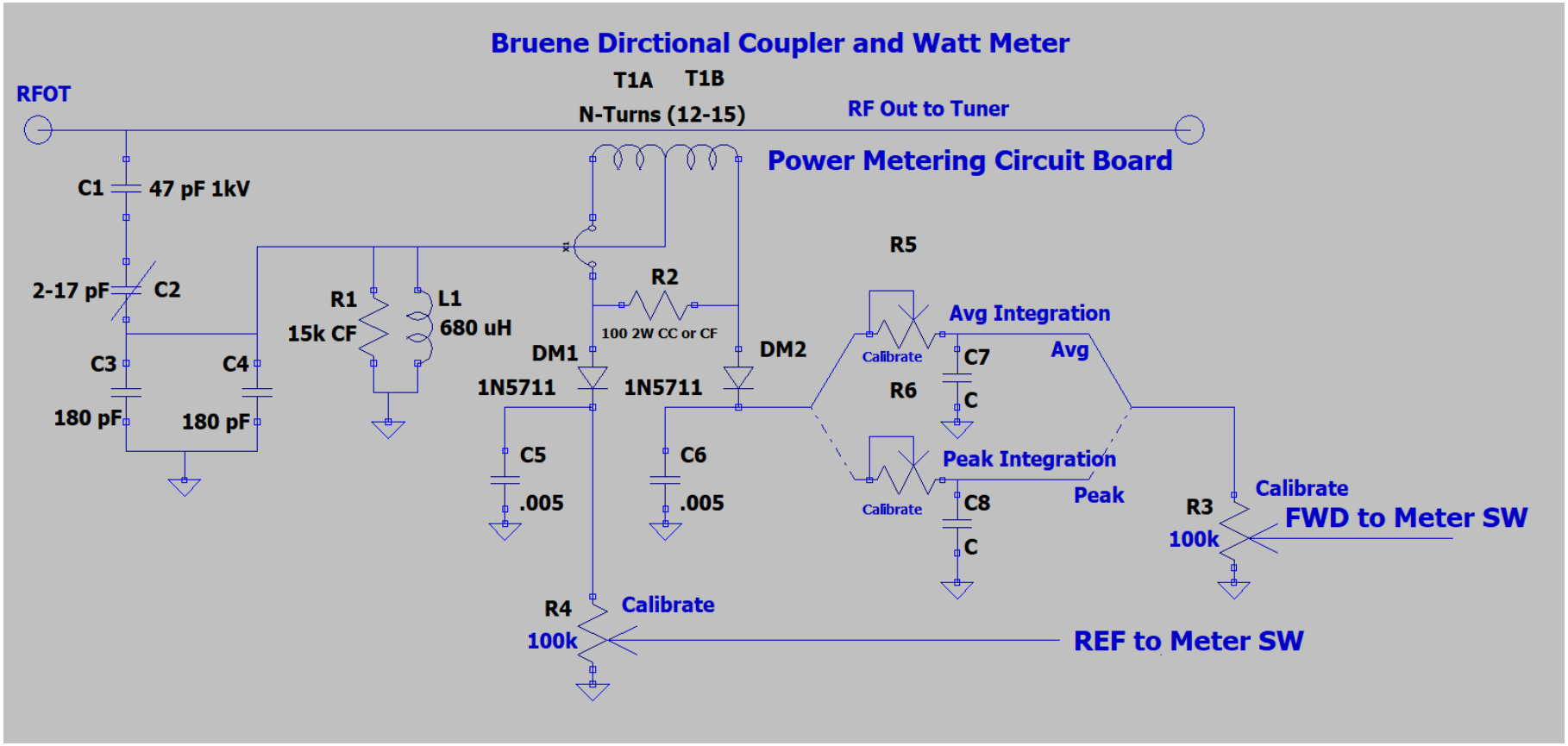
Bruene Dirctional Coupler and Watt Meter
RFOT
T1A
T1B
N-Turns (12-15)
RF Out to Tuner
Power Metering Circuit Board
C1
47 pF 1kV
2-17 pF
C2
C3
180 pF
C4
180 pF
R1
15k CF
L1
680 uH
R2
100 2W CC or CF
DM1
1N5711
DM2
1N5711
C5
.005
C6
.005
R5
Avg Integration
Calibrate
C7
Avg
R6
C
Peak Integration
Calibrate
C8
Peak
C
R3
100k
Calibrate
FWD to Meter SW
R4
100k
Calibrate
REF to Meter SW