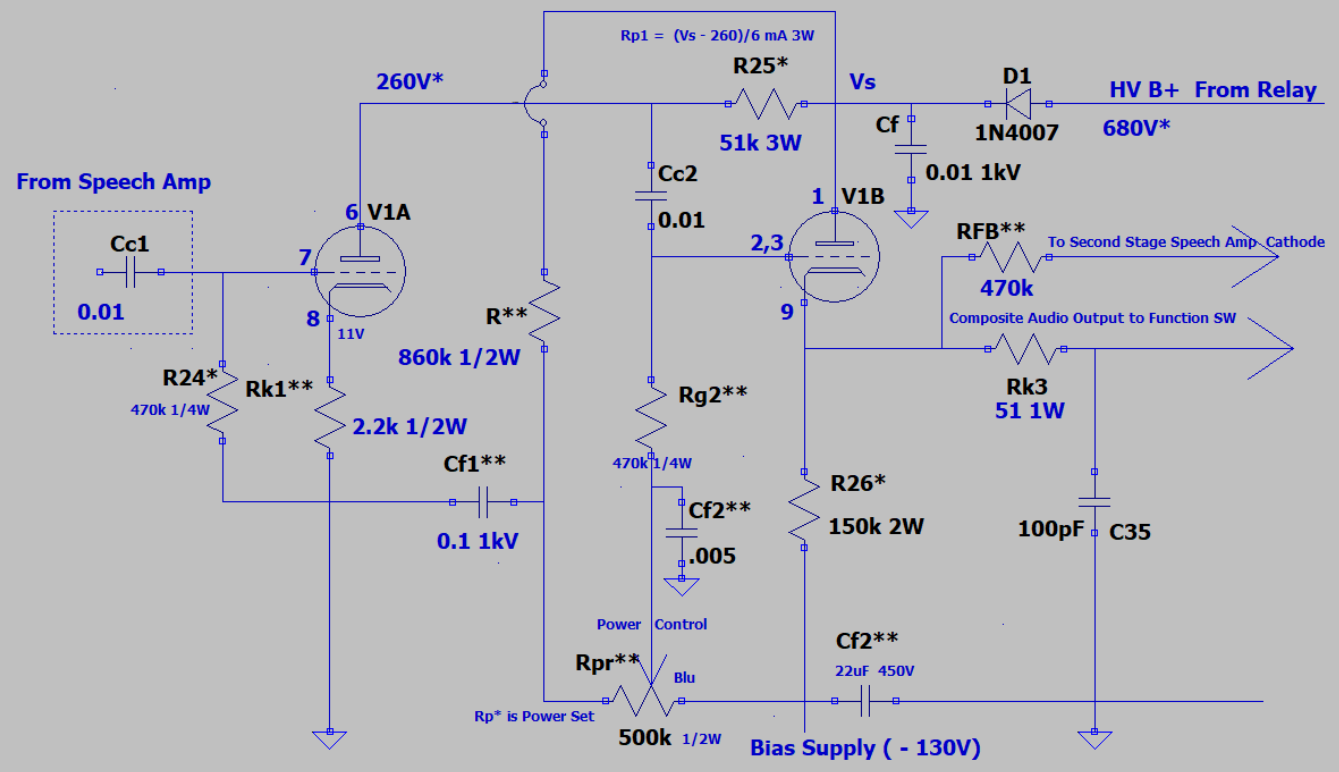AC0OB DX-60 Variable Power 6DE7 Modulator