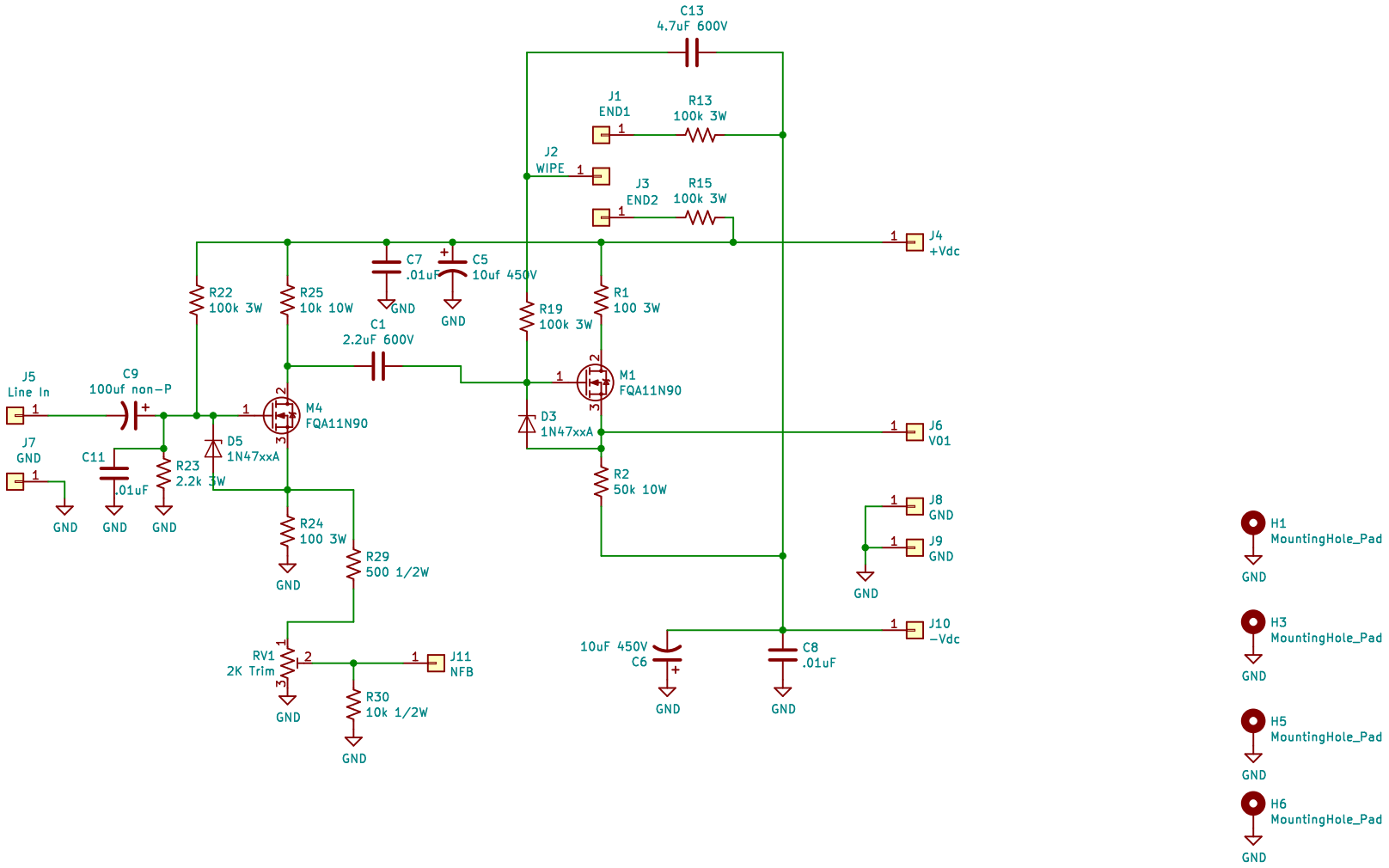

WA1GFZ

Sheet: /

File: PW Mosfet.sch

Title: Small Mosfet Driver

Size: A4	Date: 2020-11-14	**Rev: 1.2**
KiCad E.D.A. kicad (5.1.5)-3		Id: 1/1