LV Voltage Regulator with Zeners

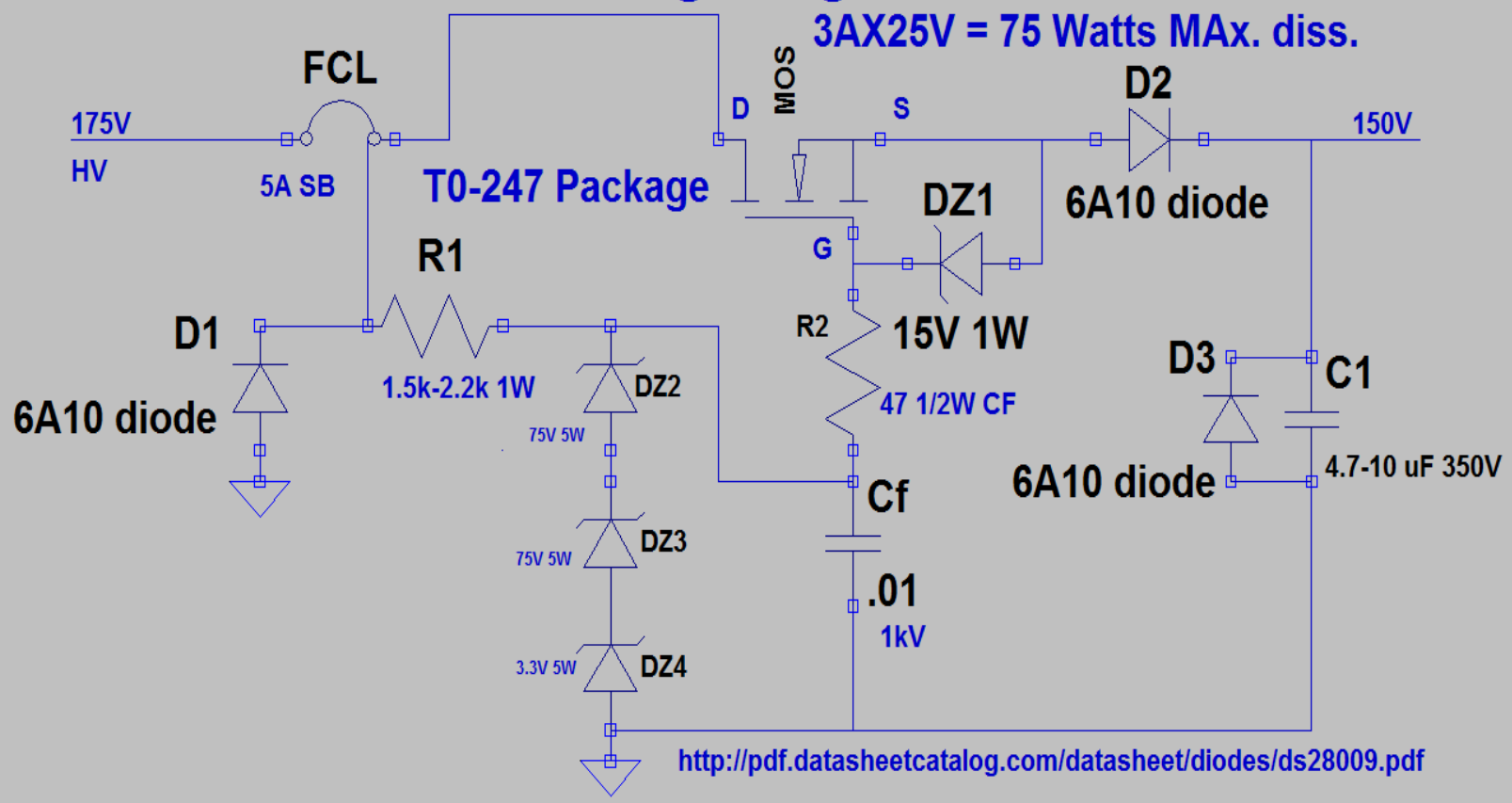

http://pdf.datasheetcatalog.com/datasheet/diodes/ds28009.pdf