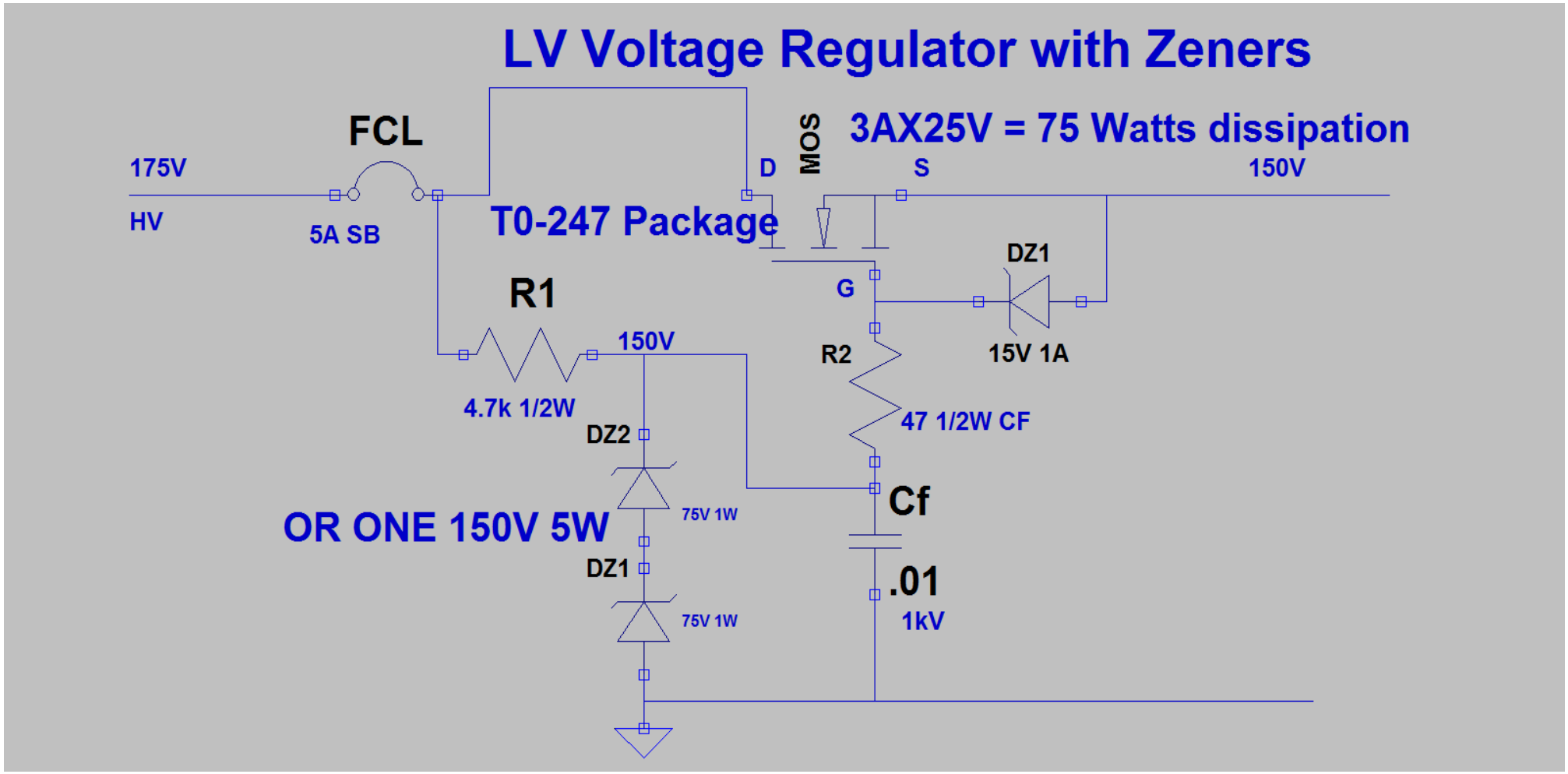
LV Voltage Regulator with Zeners
FCL
175V
HV
5A SB
T0-247 Package
D
MOS
S
3AX25V = 75 Watts dissipation
150V
DZ1
G
15V 1A
R1
150V
R2
4.7k 1/2W
47 1/2W CF
DZ2
75V 1W
OR ONE 150V 5W
Cf
DZ1
.01
75V 1W
1kV