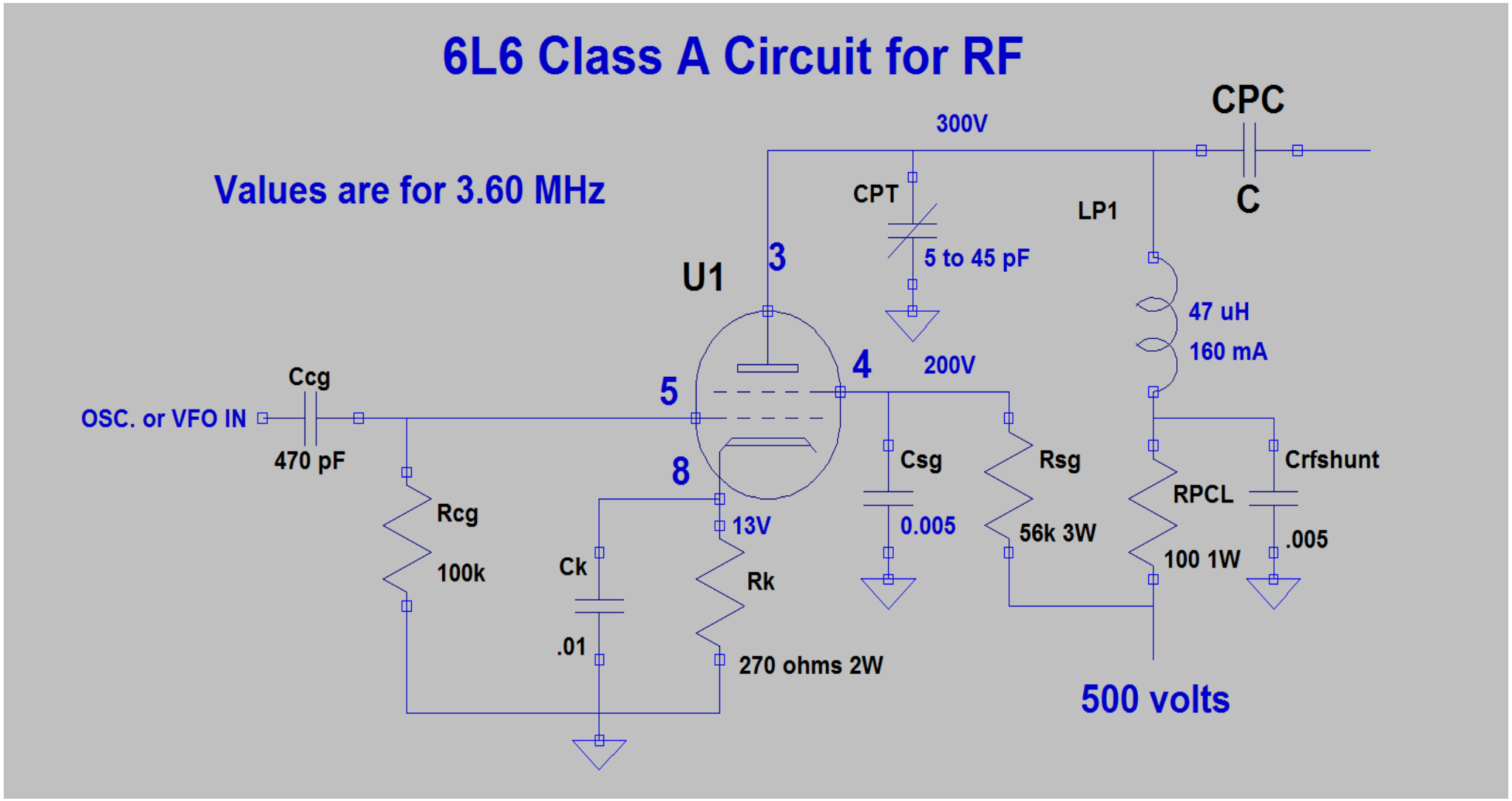
6L6 Class A Circuit for RF
Values are for 3.60 MHz
300V
CPC
C
CPT
5 to 45 pF
LP1
U1
3
47 uH
160 mA
4
200V
5
Ccg
OSC. or VFO IN
470 pF
8
Csg
Rsg
Crfshunt
Rcg
13V
0.005
56k 3W
RPCL
.005
100k
Ck
Rk
100 1W
.01
270 ohms 2W
500 volts