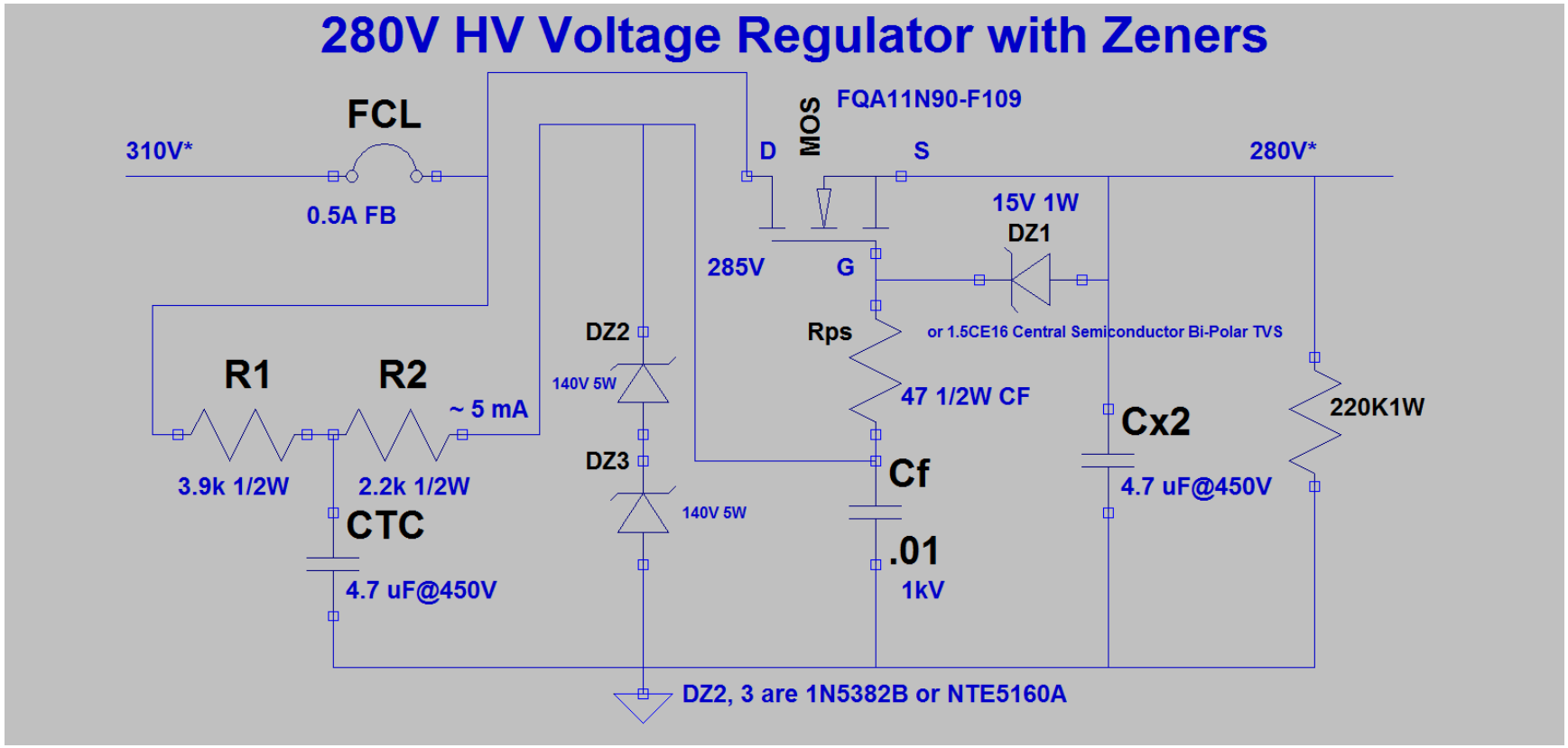
280V HV Voltage Regulator with Zeners
FCL
310V*
0.5A FB
D
MOS
FQA11N90-F109
S
280V*
15V 1W
DZ1
285V
G
or 1.5CE16 Central Semiconductor Bi-Polar TVS
DZ2
Rps
R1
R2
140V 5W
~ 5 mA
47 1/2W CF
220K1W
Cx2
DZ3
Cf
3.9k 1/2W
2.2k 1/2W
4.7 uF@450V
140V 5W
CTC
.01
4.7 uF@450V
1kV
DZ2, 3 are 1N5382B or NTE5160A