Line Input Stage Phase Splitter for Class AB1 Ver. 123

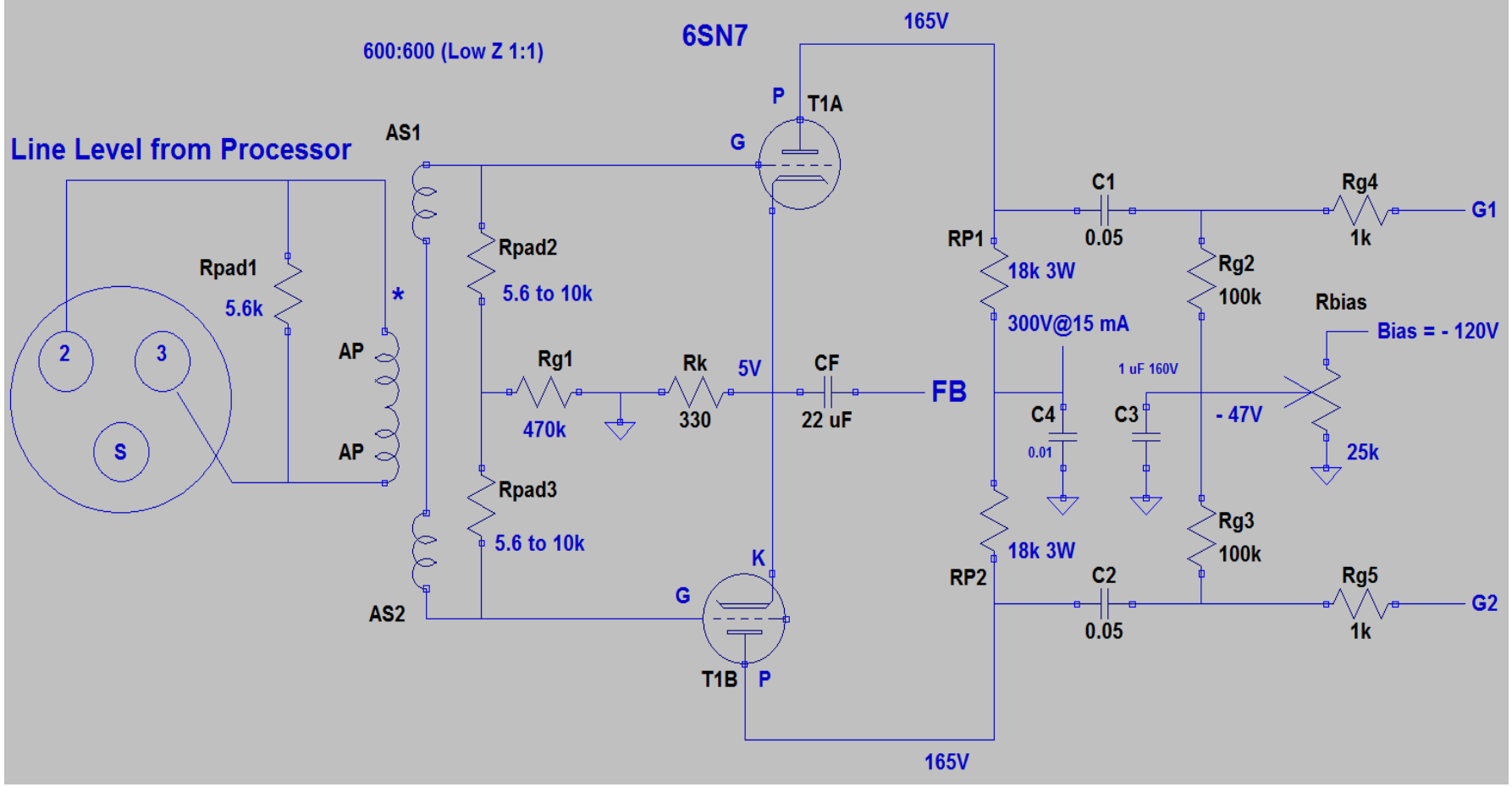

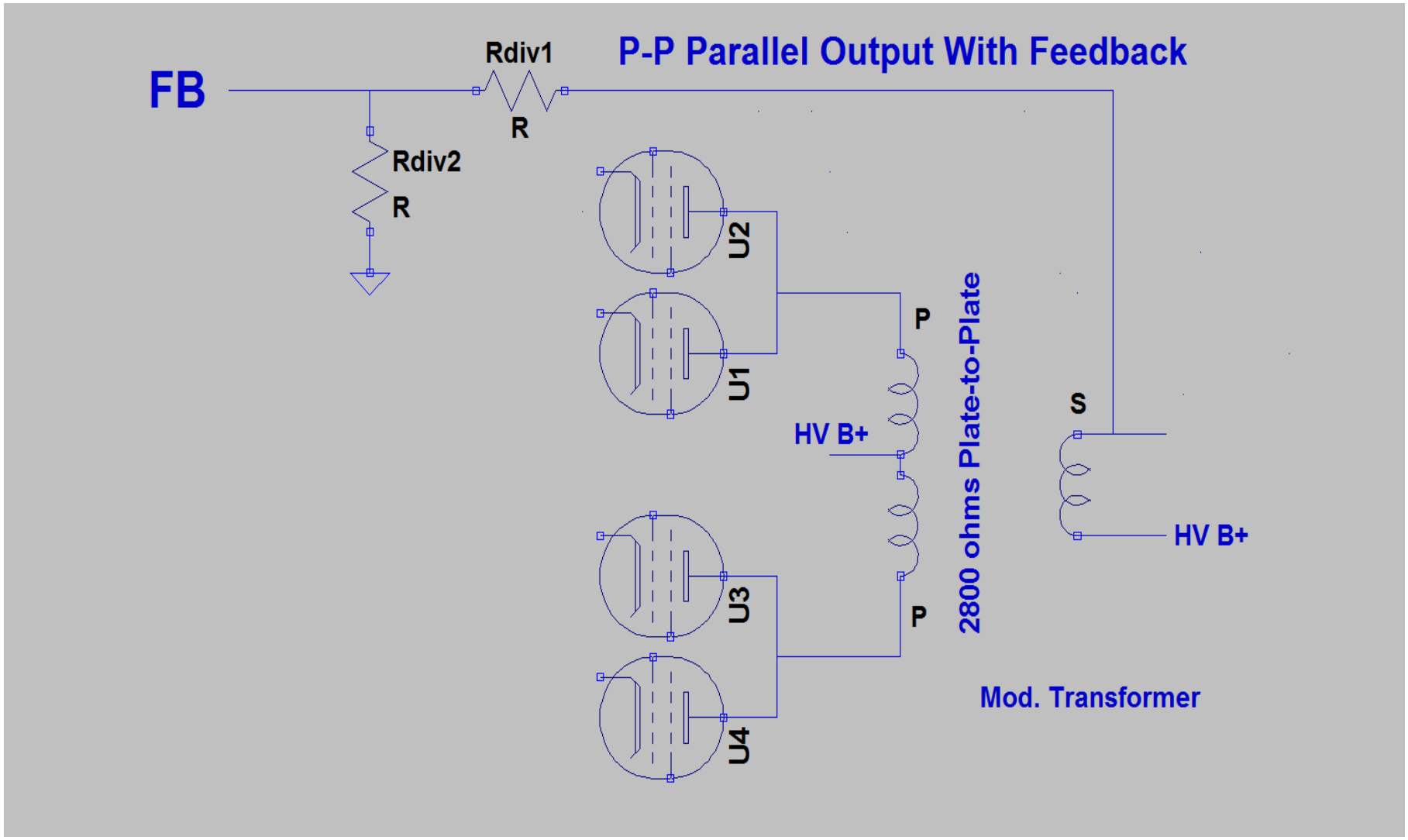
P-P Parallel Output With Feedback
FB
Rdiv1
R
Rdiv2
R
U2
U1
U3
U4
P
P
HV B+
2800 ohms Plate-to-Plate
S
HV B+
Mod. Transformer