Line Input Stage Phase Splitter for Class AB1,2

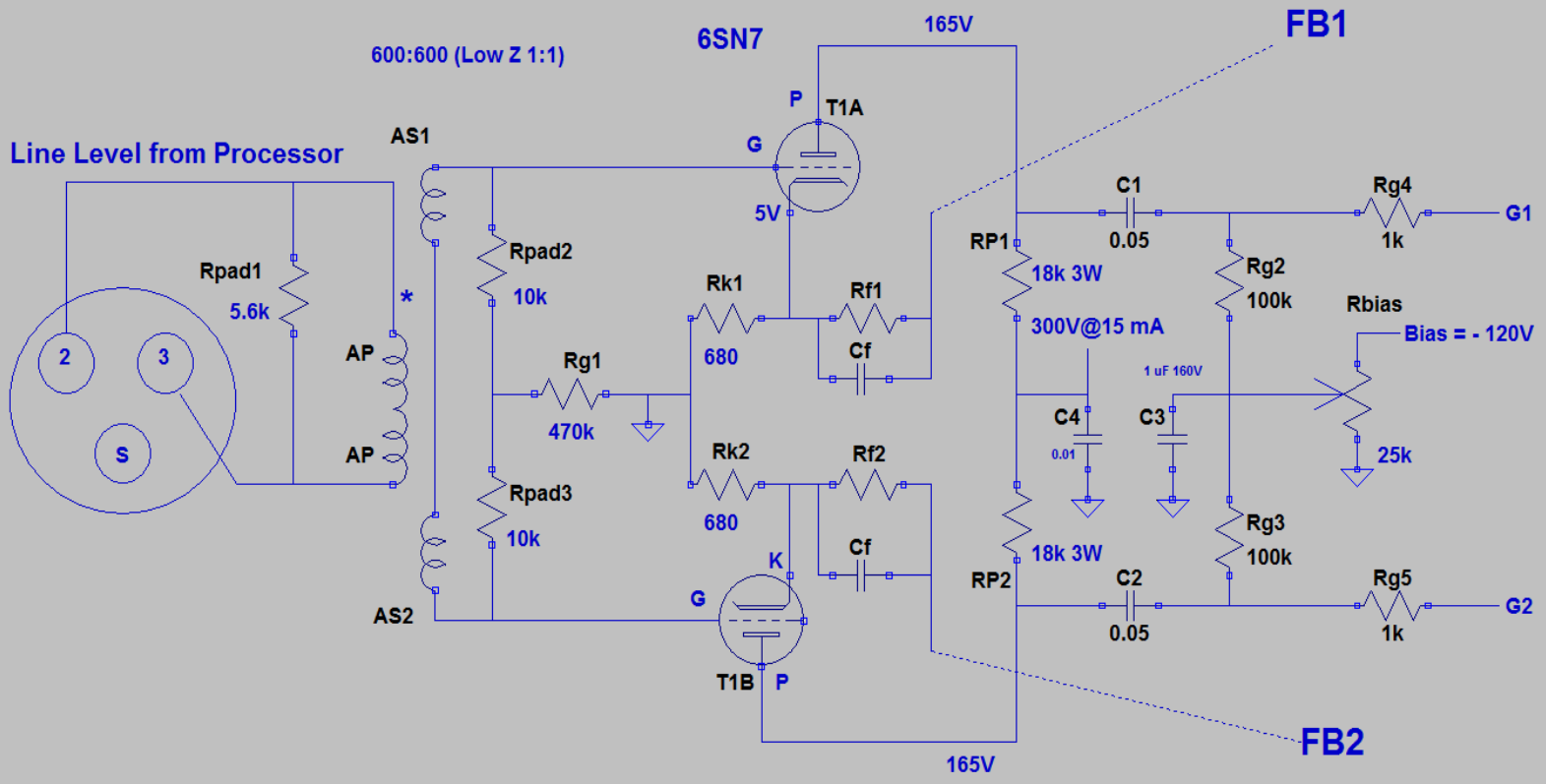

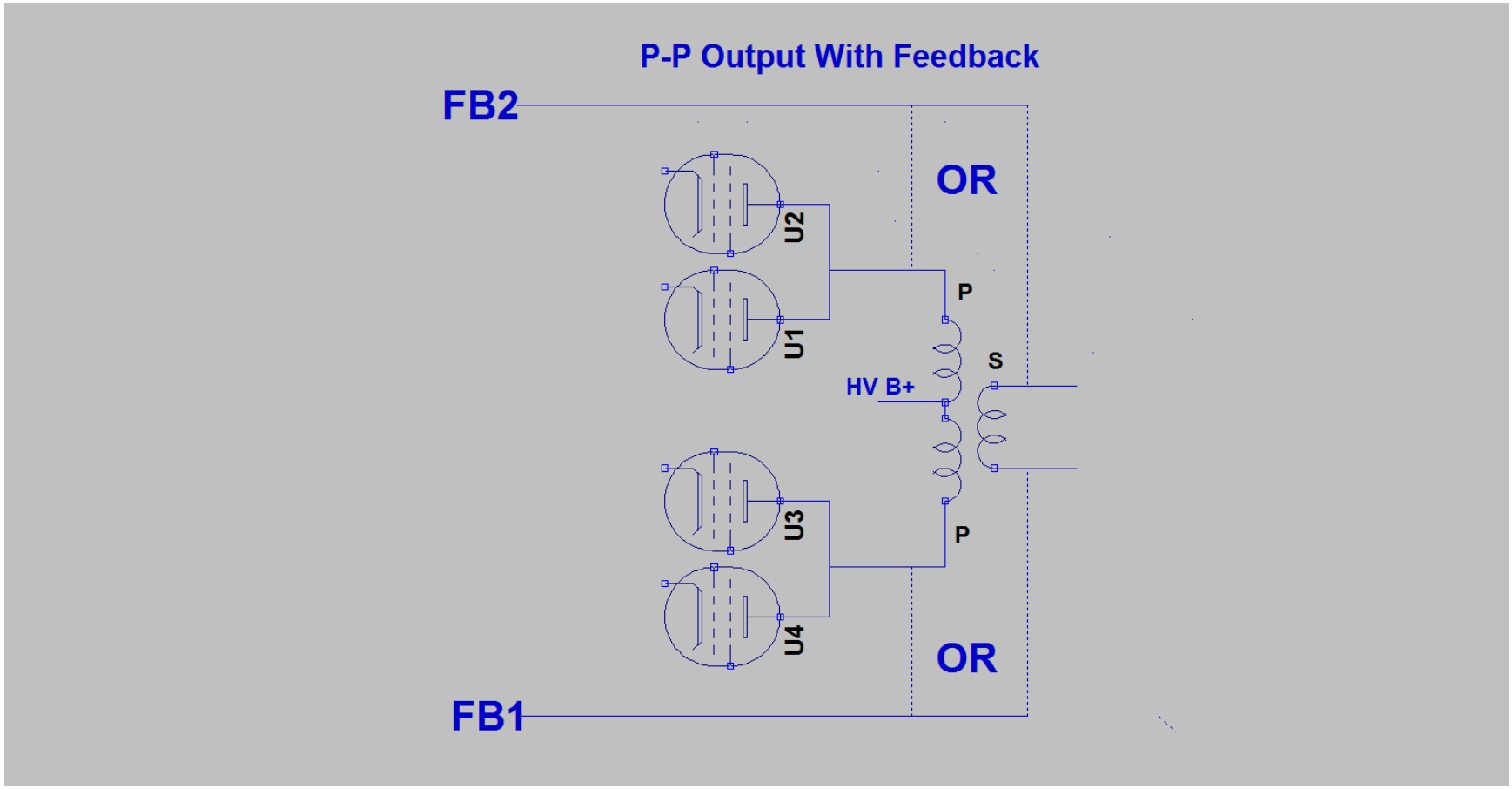
P-P Output With Feedback
FB2
OR
U2
U1
P
S
HV B+
U3
U4
P
OR
FB1