Line to Input Stage Phase Splitter for Class AB1

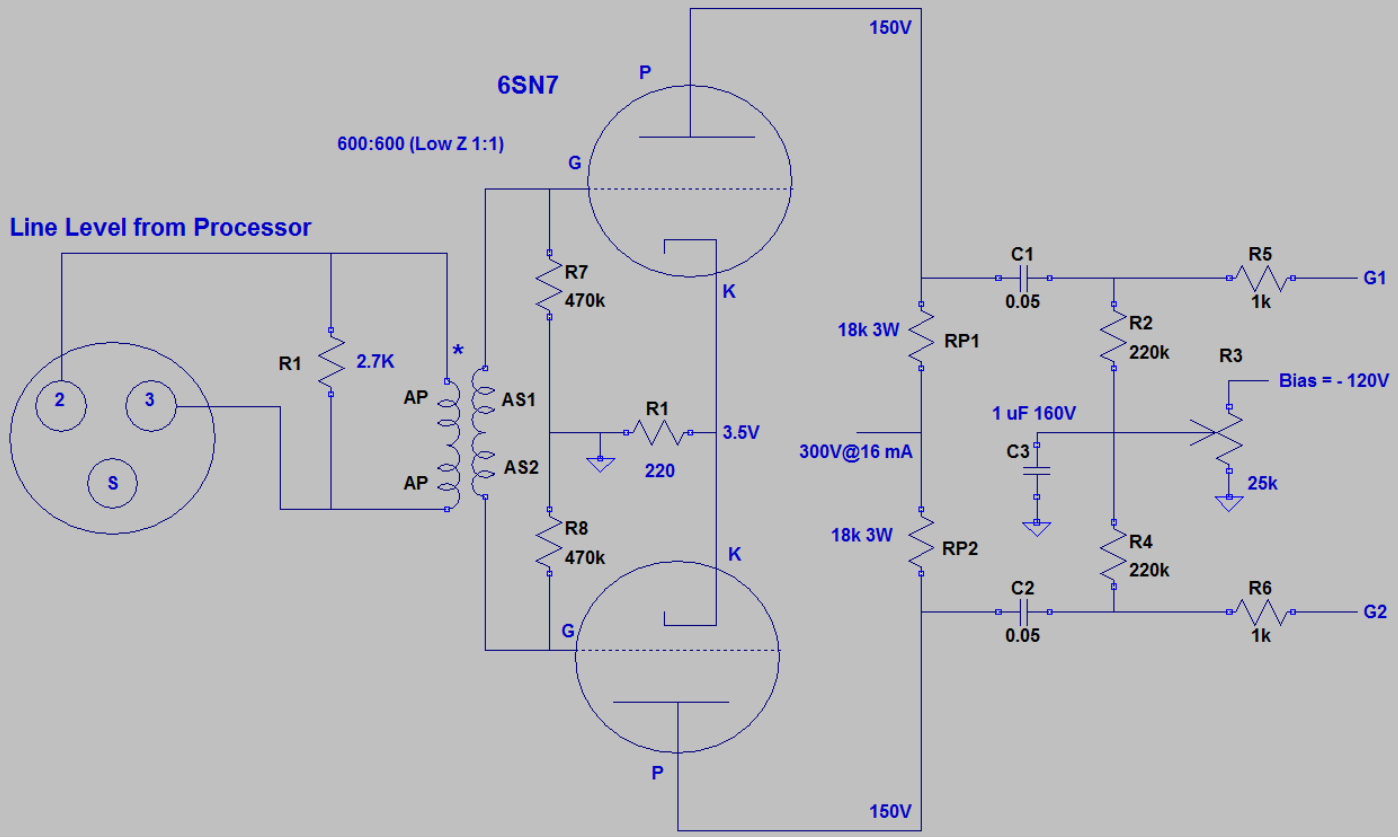
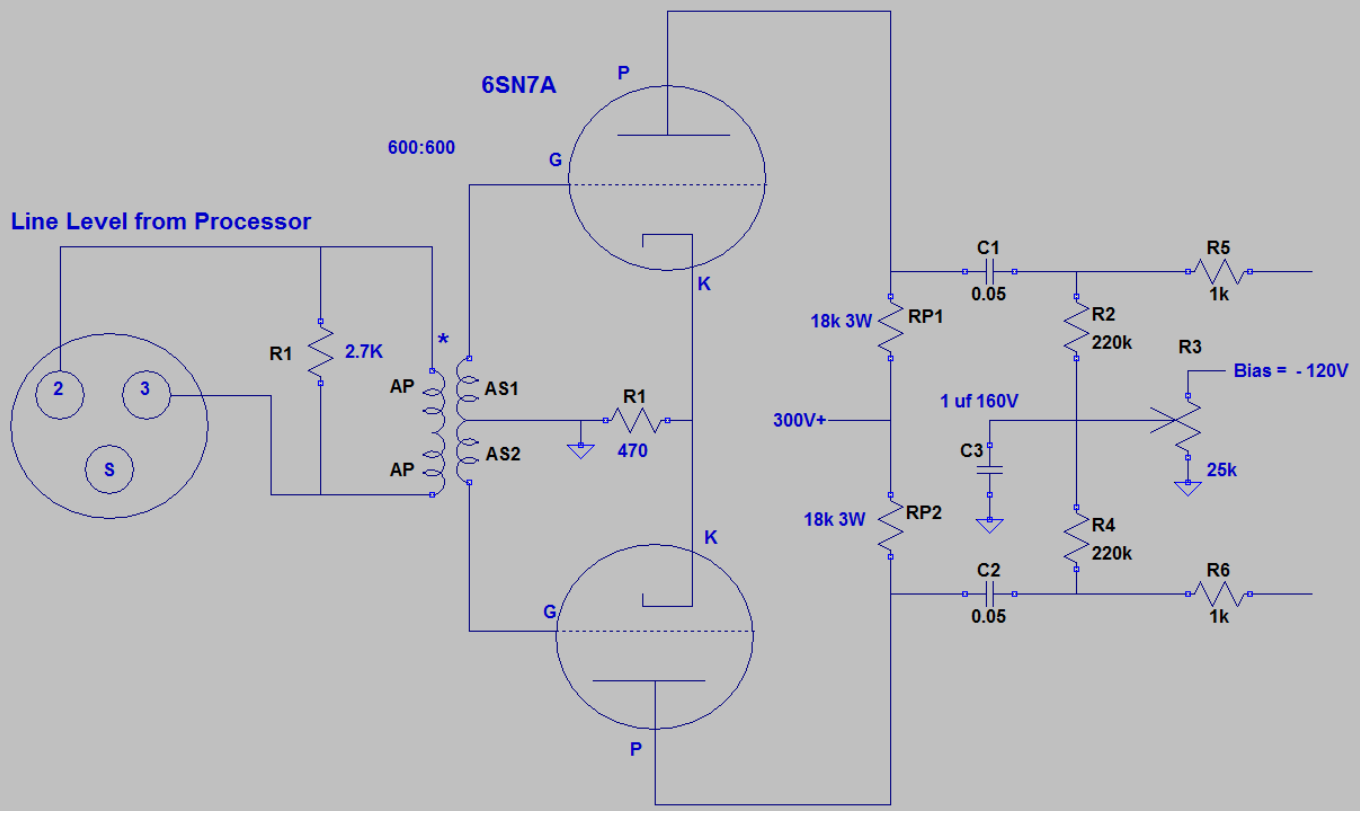
Line to Input Stage Phase Splitter for Class AB1