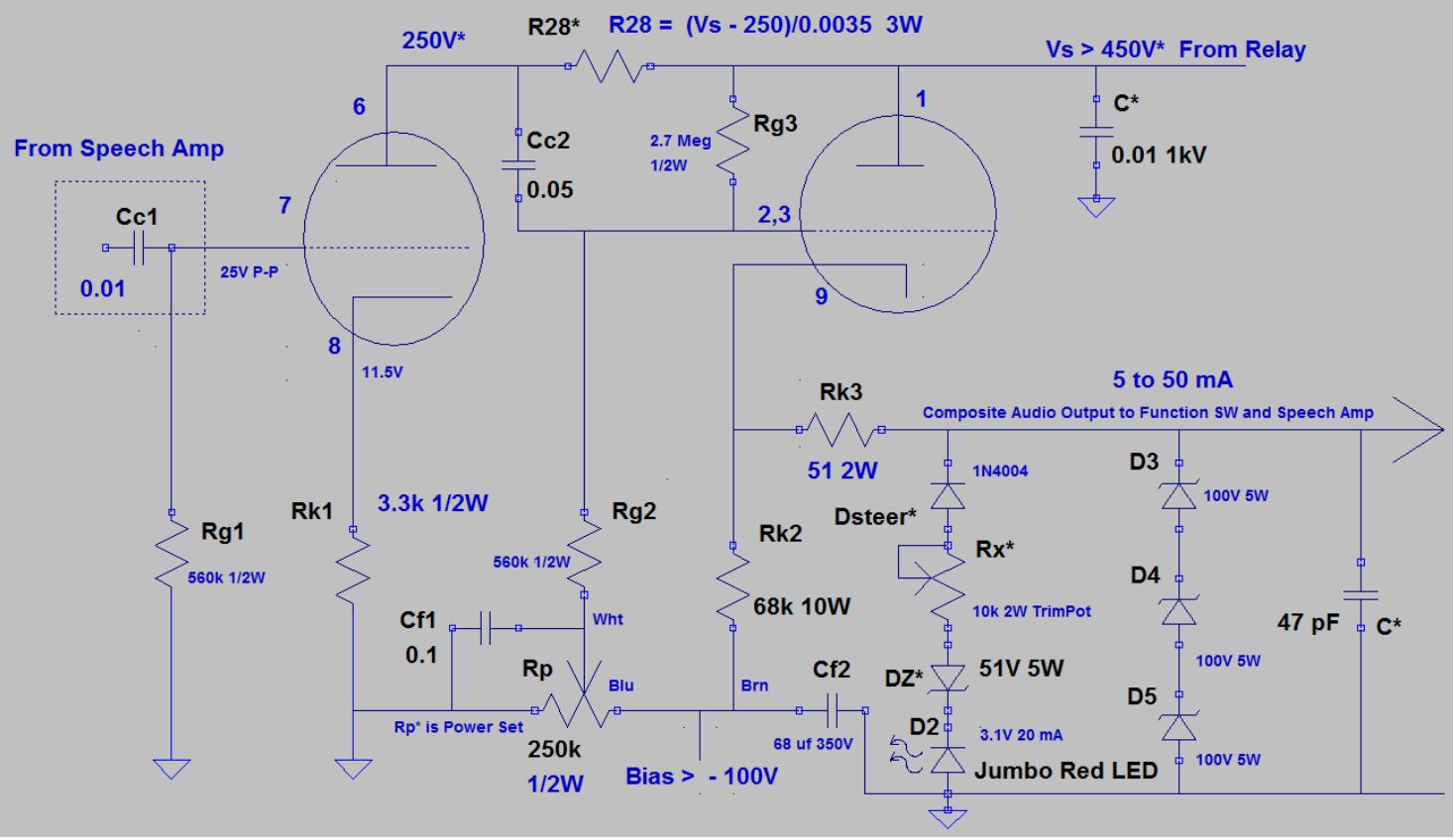Modulator Stage 6EW7 for Screen Grid Modulation