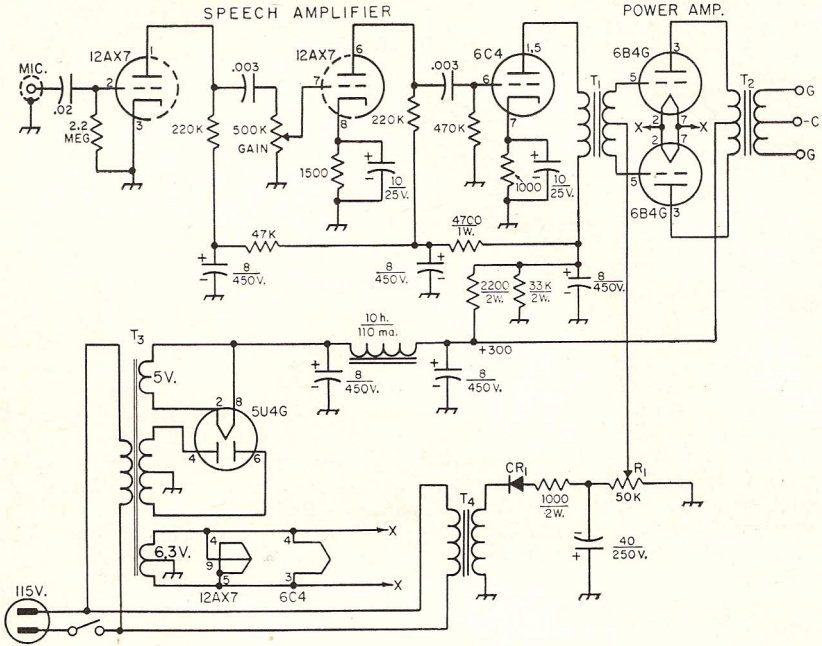

Fig. 9-8—Speech-amplifier driver for 10–15 watts output. Capacitances are in μf. Resistors are ½ watt unless specified otherwise. Capacitors with polarity indicated are electrolytic; others may be paper or ceramic.

CR_1—Selenium rectifier, 20 ma.

R_1—50,000-ohm potentiometer, preferably wire wound.

T_1—Interstage audio transformer, single plate to push-pull grids, turns ratio 2 to 1 or 3 to 1, total secondary to primary.

T_2—Class-B driver transformer, 3000 ohms plate-to-plate; secondary impedance as required by Class-B tubes used; 15 watt rating.

T_3—Power transformer, 700 volts c.t., 110 ma.; 5 volts, 3 amp.; 6.3 volts, 4 amp.

T_4—Power transformer, 125 volts, 20 ma.; 6.3 volts, 0.6 amp.