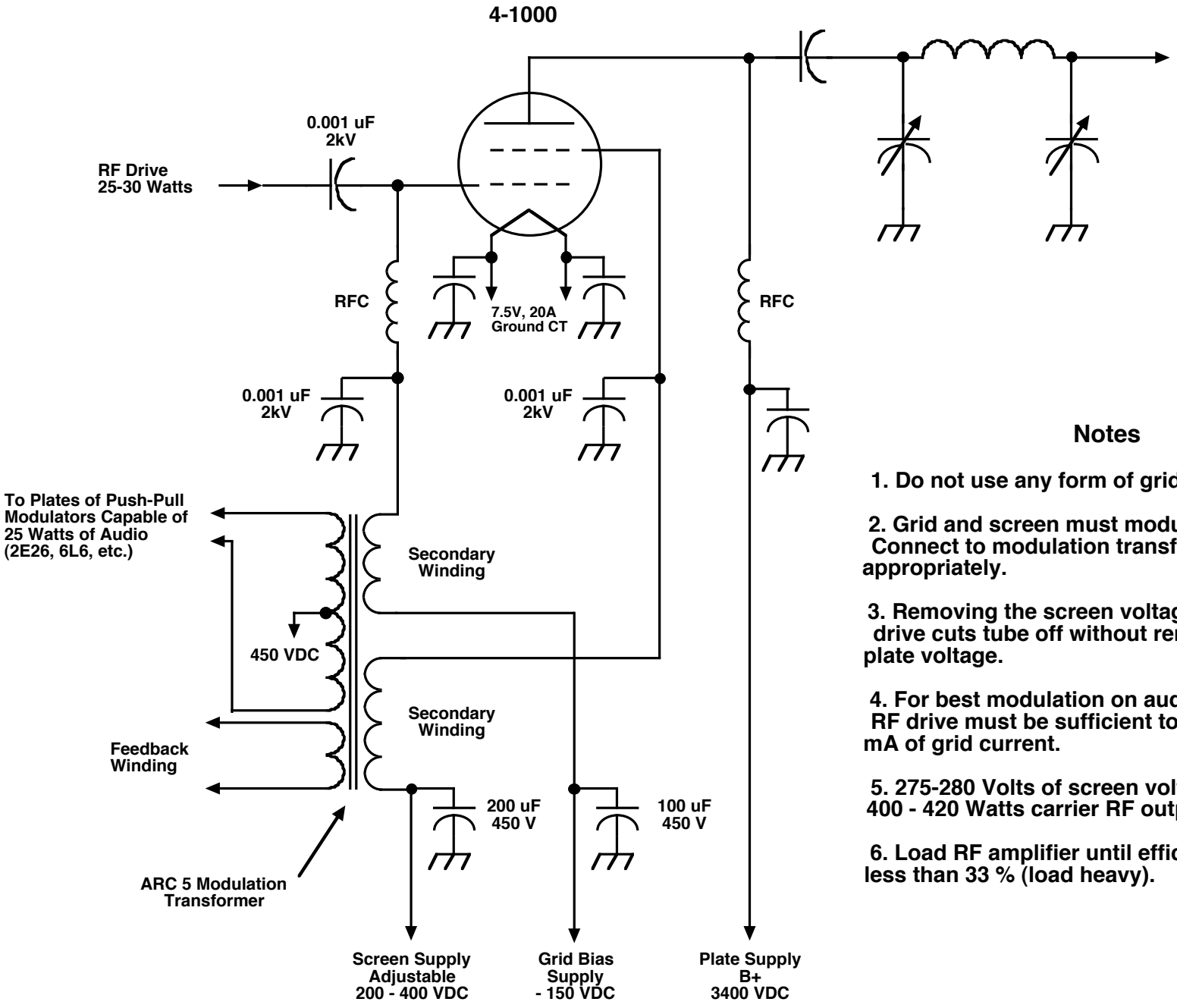

Notes

1. Do not use any form of grid-leak resistor.

2. Grid and screen must modulate in-phase. Connect to modulation transformer appropriately.

3. Removing the screen voltage and grid drive cuts tube off without removing the plate voltage.

4. For best modulation on audio peaks, the RF drive must be sufficient to produce 35-40 mA of grid current.

5. 275-280 Volts of screen voltage produces 400 - 420 Watts carrier RF output.

6. Load RF amplifier until efficiency drops to less than 33 % (load heavy).

Screen Modulated 4-1000
by Frank - KB3AHE