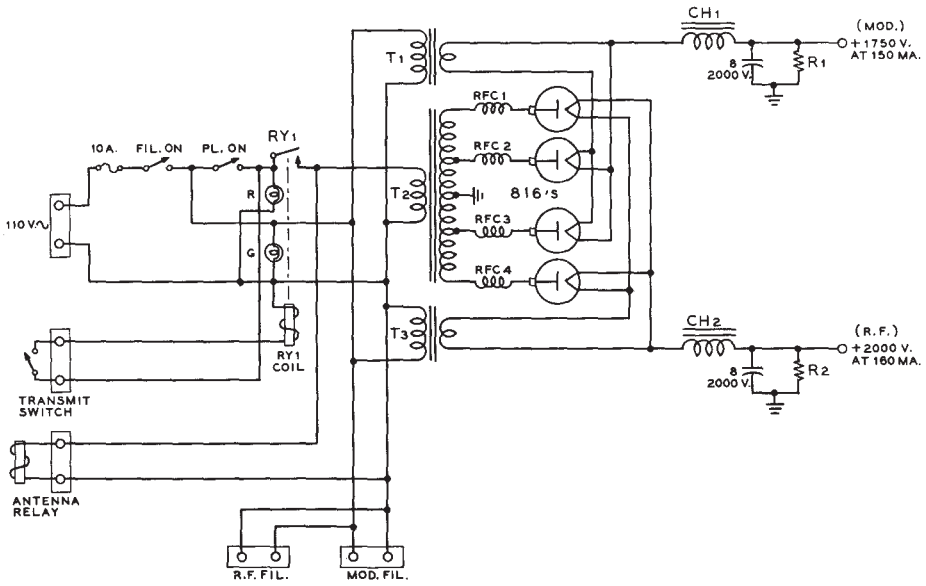

Figure 47
DUAL VOLTAGE POWER SUPPLY

T_1, T_3—2.5 volts at 5 amperes. Stancor P-6133
T_2—2400-2100 volts each side center tap at 375 ma. ICAS. Stancor P-8032
CH_1—3 to 17 henry, 300 ma. Stancor C-1403
CH_2—8 henry, 300 ma., Stancor C-1413
R_1, R_2—70K., 100 watt
RFC_1, RFC_2—"Hash" suppression choke. J. W. Miller 7865 twin chokes (2 req.)
RY_1—SPST relay, 115 volt coil.

ing current drain of 50-300 ma. Specifically, the supply is employed with a transmitter having a pair of 4-250A tetrode tubes in the class C stage, and a pair of 810 modulator tubes. For sideband work, the supply may be used to power a 1750 watt p.e.p. linear amplifier, such as the 4CX-1000A amplifier shown in an earlier chapter.

Because the total weight of the components is over 150 pounds, the supply should be built directly on the bottom of a relay rack instead of upon a steel chassis.

The r-f hash suppression chokes RFC_1 and RFC_2 are fastened directly to the high voltage terminals of the plate transformer. The two 872-A rectifier tubes are so located that the leads from the r-f chokes to the plate caps are only about three inches long.

A 0.15 μfd., 5000 volt paper capacitor is used to resonate the filter choke to approximately 120 cycles at a bleeder current of 25 milliamperes. When full load current is drawn, the inductance of the filter choke drops, detuning the parallel resonant circuit. Improved voltage regulation is gained by this action; the no load voltage increases only 200 volts over the full load voltage.

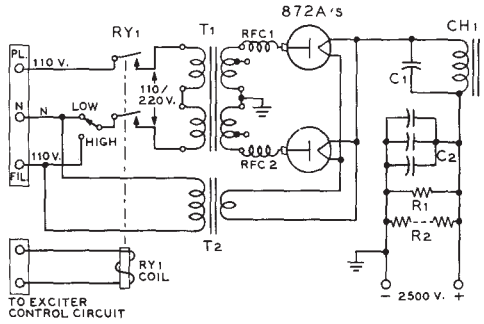

T1-2900-0-2900 VOLTS AT 700 MA., ICAS. *CHICAGO P-2126*
T2-5 VOLTS, 10 AMP., *CHICAGO F-510H*
CH1-6 HENRIES, 700 MA. *CHICAGO R-67*
C1-0.15 µF, 5000-VOLT.
C2-THREE 4-UF 3000-VOLT
R1-100,000 OHMS, 200-WATT.
R2-ELEVEN 0.5 MEG. 2-WATT RESISTORS IN SERIES
RY1-DPST RELAY, 110 V. COIL, 20 A. CONTACTS. *POTTER & BRUMFIELD PR7A*
RFC1, RFC2-HASH FILTER, *J.W. MILLER CO. Nº 7868*

Figure 48
HIGH VOLTAGE POWER SUPPLY